E Series

DuraMAC™ Booster Pump

Not all boosting applications require complicated boosting systems. The DuraMAC™ Boosting system is simple, versatile, sophisticated, and reliable. With an easy set-up installation and a versatile control with three modes of operation, this pump is flexible enough to meet your commercial or irrigation needs.

The 304 stainless steel version of the DuraMAC™ Booster pump will meet the needs of boosting water pressure from Reverse Osmosis (RO) systems, low PH and other agressive water applications which would be corrosive to no-lead brass and metal pipes.

See Pumps & Accessories Price List for Limited Warranty details.

Features:

- Water pressure boosting system for residential, irrigation, or light commercial use
- Easy set-up installation
- All metal connections - no plastic threads
- Half-gallon pressure tank included
- TEFC single phase motor for quiet operation
- Electronics separated and sealed from waterway
- No-Lead Brass / 304 stainless steel check valve included
- Dry-Run protection
- 1” inlet and outlet
- 1 year warranty

Materials of Construction

- Impellers	304 Stainless Steel
- Pump Casing Inlet	301 Stainless Steel
- Pump Casing Outlet	301 Stainless Steel
- Pump Seal (stationary)	Silicon Carbide
- Pump Seal (rotating)	Carbon / NBR
- Diffuser	304 Stainless Steel
- Check Valve	No-Lead Brass / Stainless Steel
- Pump Controller Cross	No-Lead Brass / Stainless Steel

DuraMAC™ Performance (Additional Boost)

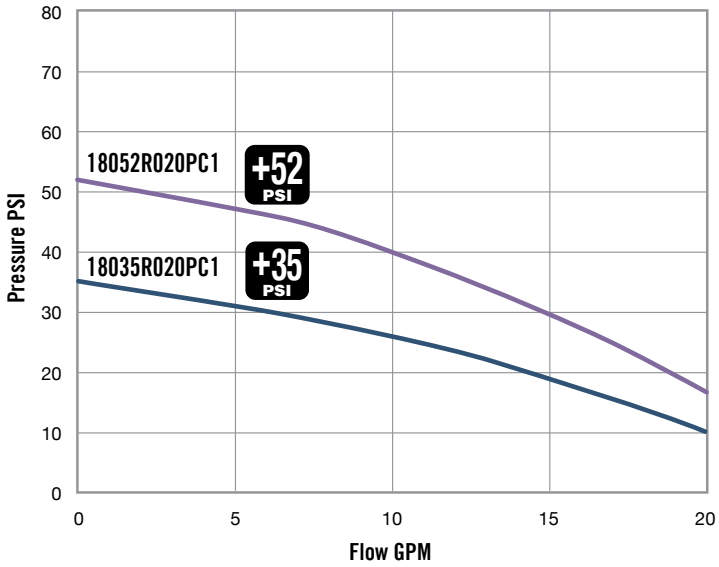

Models Available

DuraMAC™ Model	Pump Boost	Amps	Voltage	Power	Weight
18035R020PC1	35 PSI	5.5	120 - 60 Hz	1/2 HP	27.1
18052R020PC1	52 PSI	7.0	120 - 60 Hz	3/4 HP	27.7
18035R020PC1SS	35 PSI	5.5	120 - 60 Hz	1/2 HP	27.1
18052R020PC1SS	52 PSI	7.0	120 - 60 Hz	3/4 HP	27.7

E-Series DuraMAC™ Booster Pump

Sizing Information

E-Series DuraMAC™ Booster Systems are designed to shut off when no flow is detected. Pump total pressure boost should be added to current household system pressure to determine total system pressure when boosted. Note: It is not recommended to exceed 80 PSI total boosted household pressure.

Example:
Household system pressure before boost = 30 PSI

30	+	_____	=	_____
Household Pressure		Total Pump Pressure		Total Pressure After Boost

*Not Recommended to Exceed 80 PSI

Models Available:	**Boost**
18035R020PC1	+35
18052R020PC1	+52

30	+	35	=	65
Household Pressure		Total Pump Pressure		Total Pressure After Boost

Based on this example, the recommended model for this application is the 18035R020PC1.

For systems with fluctuating pressure, a pressure reducing valve is recommended to assure system pressure stays below 80 PSI.

Dimensional Information

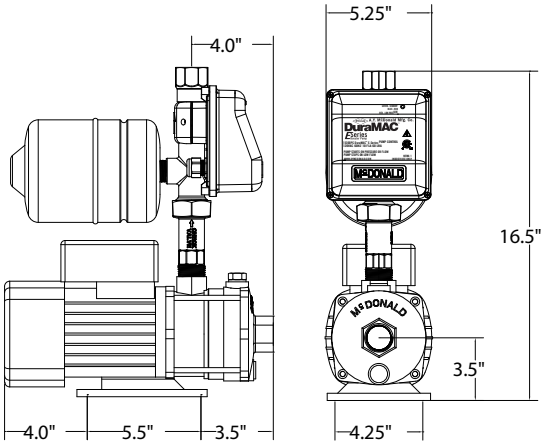

Sizing Chart

Total static pressure **DuraMAC**™ pump

Incoming Pressure (PSI)	18035R020PC1 +35 PSI	18052R020PC1 +52 PSI
60		
55	90	
50	85	
45	80	
40	75	
35	70	87
30	65	82
25	60	77
20	55	72
15	50	67
10	45	62

CONTACT FACTORY

Typical Installation

CITY OR WELL SUPPLY

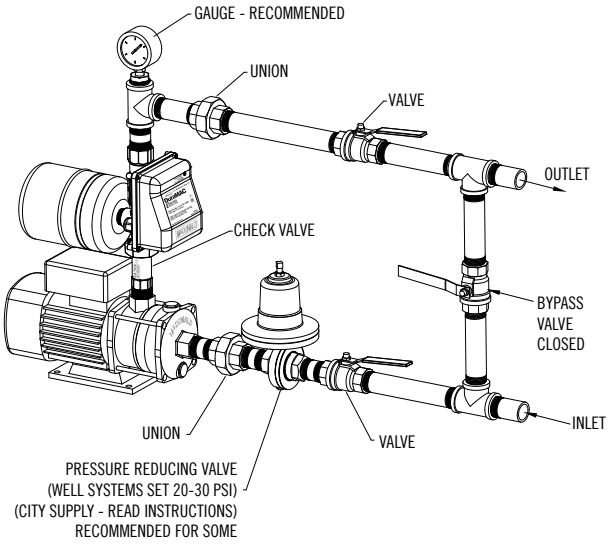
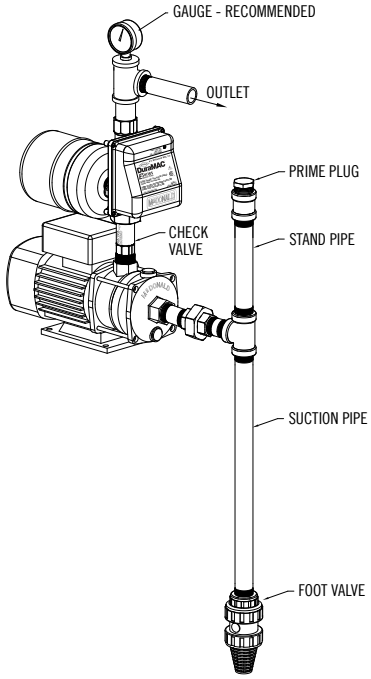
SUCTION LIFT
10 Ft. Max