Water Pressure Booster System
DuraMAC™ Vertical Multi-Stage Centrifugal Pumps

Manual - Variable Speed Booster Systems
1 1/2 - 3 HP

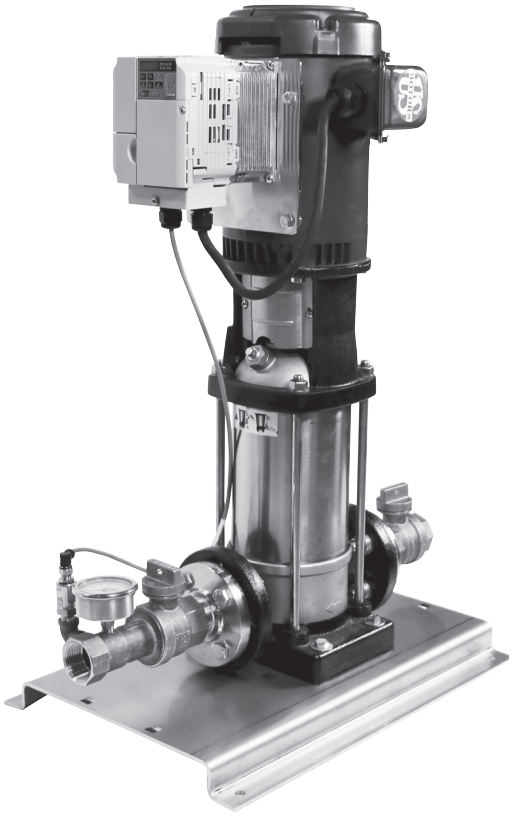

Simplex

Duplex

ATTENTION!

Important information for installers of this equipment!

This equipment is intended for installation by technically qualified personnel. Failure to install it in compliance with the national and local electrical codes and with motor suppliers recommendations, may result in electrical shock or fire hazard, unsatisfactory performance, and equipment failure.

WARNING!

Serious or fatal electrical shock may result from failure to connect the motor, control enclosures, metal plumbing, and all other metal near the motor or cable, to the power supply ground terminal using wire no smaller than motor cable wires. To reduce risk of electrical shock, disconnect power before working on or around the water system.

WARNING: It is unlawful in **CALIFORNIA & VERMONT (effective 1/1/2010); MARYLAND (effective 1/1/2012); LOUISIANA (effective 1/1/2013) and the UNITED STATES OF AMERICA (effective 1/4/2014)** to use any product in the installation or repair of any public water system or any plumbing in a facility or system that provides water for human consumption if the wetted surface area of the product has a weighted average lead content greater than 0.25%. This prohibition does not extend to service saddles used in California, Louisiana or under USA Public Law 111-380. **WARNING:** This product can expose you to chemicals including lead, which is known to the State of **CALIFORNIA** to cause cancer and birth defects or other reproductive harm. For more information go to: www.P65Warnings.ca.gov.

Table of Contents

1.Installation 2
1.1 Mechanical 3
1.2 Electrical 3
1.3 Priming 3

2. Programming Functions 4
2.1 Getting Started 4
2.2 Set System Setpoint 5
2.3 Auto Mode 6
2.4 Hand Mode 6
2.5 How to Change Parameters 7
2.6 Monitor Frequency and Current 7
2.7 Parameter Overview 8
2.8 Start Draw Down Level 10
2.9 Auto Restart 10
2.10 High/Low Discharge Pressure 10

3. Troubleshooting 11
General Troubleshooting 11

4. Wiring Diagrams 12

1. Installation

DuraMAC™ booster systems are shipped in a wooden frame/cardboard box and are designed to be lifted from the bottom by fork truck only. Care should be taken when unboxing the system to prevent damage. Any shipping damage should be reported to the shipping carrier and local product dealer. Claims for shipping damage must be made through the shipping carrier.

Check system nameplate and verify that the model number is correct. Also confirm that voltage, phase, and horsepower are accurate. For maintenance of the pump and/or motor, see instruction sheet 3210-528, DuraMAC™ Vertical Multi Stage Centrifugal pumps.

1.1 Mechanical

Do not lift pump system by the motor eyebolts or the intake/outlet manifolds. Use lifting straps suitable for the system weight. Straps should be secured around the pump or system base. Use Caution.

The booster system must be installed in a well ventilated area without excess dust or moisture. The booster system should be bolted directly to the floor using the supplied base holes. If noise and vibration is a concern, the booster system can be mounted using a rubber gasket between the floor and base.

Expansion joints can help reduce noise and vibration transmitted through the outlet piping to the downstream user. In addition expansion joints can reduce the stress on suction and outlet piping associated with system misalignment during installation.

The suction and outlet piping should be same size or larger of the booster system. On Duplex systems, either end of the manifold may be used. The unused end must be capped.

A diaphragm pressure tank is required on the outlet piping close to the pump. Sizing of the tank is dependent on the maximum flow capacity of the system. The tank size should be 10-20% of the maximum flow of the system. For example, a system with a maximum flow of 50 GPM should use a 5-10 gallon tank. The tank air pressure should be 15 psi below the set point. Note: if the tank is larger than 25% of the maximum flow, the pump may not sleep when water is not running. Decreasing Parameter P2-24 can improve this. See Section 2.5 for changing parameters.

1.2 Electrical

All electrical connections and installation must be carried out be a licensed electrician in accordance with all national and local codes and regulations.

The electrical supply should match that as stated on the booster system label. See wiring diagrams in section 4 for electrical connections, minimum wire sizes.

1.3 Priming

- Flooded Suction Systems

Flooded suction systems have either an incoming supply pressure or an elevated holding tank. Ensure that all section valves are open and that the pump discharge valve is closed. Open the small vent plug on top of the pump. Air and spurts of water will spray out. Close the vent plug when a steady stream of water is flowing.

- Suction Lift Systems

Suction lift systems should have a foot check valve on the suction line at the water source. The pump discharge valve should be closed at this time. A fill point near the pump system inlet is recommended to ensure the entire suction line can be filled with water. Remove the large vent plug on the pump(s) and fill completely with water. Replace vent plug and ensure entire inlet piping is pressure tight.

- System Priming

The system may now be primed by starting the Yaskawa drive in HAND mode and slowly opening up the discharge valve(s). Do not fully open the discharge valve until all the air has been purged from the lines. After all system lines have been filled with water, the discharge valve may be completely opened. The system may now be started by pressing the AUTO key.

Do not operate against a closed discharge valve for more than three minutes as pump overheating and damage may occur.

2. Programming Function

2.1 Getting Started

The Yaskawa iQpump Micro drive features powerful software combined with an internal PLC to deliver Multiple features that are designed help protect the drive, pump, motor, and entire pumping system. While many of these features are factory programmed and set, many features depend on the specific pumping application and may be required to be set during install.

Changing certain parameters while the drive and pump are running may cause unwanted behavior. It is recommended to turn the drive off OFF before changing parameter values.

◆ Keys, Displays, and LEDs

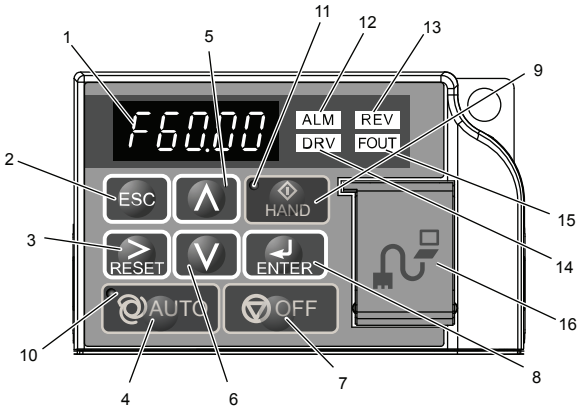

Table 2.1 Keys and Displays on the LED Operator

No.	Display	Name	Function
1	F60.00	Data Display Area	Displays the frequency references, parameter number, etc.
2	ESC	ESC Key	Returns to the previous menu.
3	RESET	RESET Key	Moves the cursor to the right. Resets the drive to clear a fault situation.
4	AUTO	AUTO Key	Selects the source of Run command and frequency reference. - Set the drive to AUTO mode. - Run command input source depends on b1-02. - Frequency reference input source depends on b1-01.
5	∧	Up Arrow Key	Scrolls up to display the next item, selects parameter numbers, and increments setting values.
6	∨	Down Arrow Key	Scrolls down to display the previous item, selects parameter numbers, and decrements setting values.
7	OFF	OFF Key	Follows the stopping method set in b1-03 to stop drive operation.
8	ENTER	ENTER Key	- Enters parameter values and settings. - Selects a menu item to move between displays.

No.	Display	Name	Function
9	HAND	HAND Key	The drive runs at a selectable frequency reference source as set by P5-01. - Set the drive to HAND mode. - When P5-03 is set to 1, HAND and AUTO mode can be switched while the drive is running.
10	AUTO	AUTO Light	Lit while the drive is in AUTO mode. Refer to the Yaskawa manual.
11	HAND	HAND Light	Lit while the drive is in HAND mode. Refer to the Yaskawa manual.
12	ALM	ALM LED Light	*Refer to LED Screen Displays in the Yaskawa manual.*
13	REV	REV LED Light	
14	DRV	DRV LED Light	
15	FOUT	FOUT LED Light	
16		Communication Port	Port used for USB Copy Unit, LCD Operator Keypad, and for connecting to a PC. **NOTICE:** *Use only specified cable when making connections to the drive. Failure to comply may damage the drive.* **NOTICE:** *Do not open the port cover wider than 90 degrees. Failure to comply may break the port cover and leave the unprotected port susceptible to damage.*

2.2 Set the System Set Point

Press ENTER to access or modify the system setpoint in parameter Q1-01 within the iQpump Micro Quick Setup Menu. iQpump Micro Quick Setup Menu. Use RESET to select the digit and ∧ ∨. Next press ENTER to store setpoint.

Next press ENTER to store setpoint.

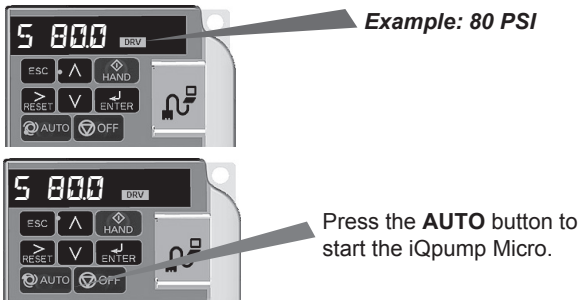

The iQpump Micro starts in AUTO Mode when the feedback signal level falls below the level programmed in parameter P1-04 for the specified time in P1-05.

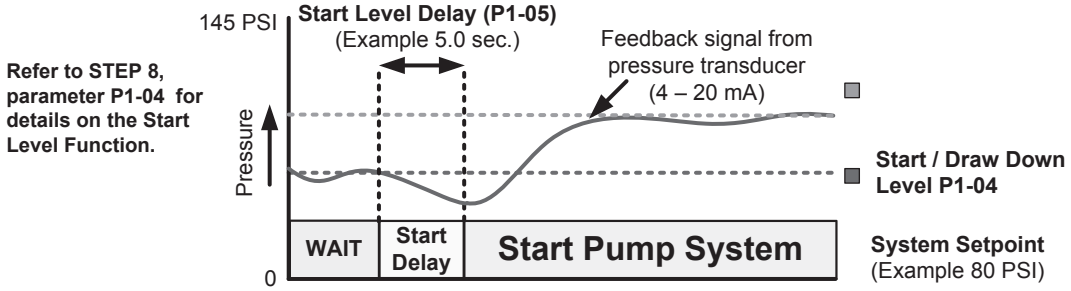

2.3 Auto Mode

Auto Mode is used in normal operation for the pump to speed up slow down to maintain the setpoint. It will also have the pump sleep when water is not being used.

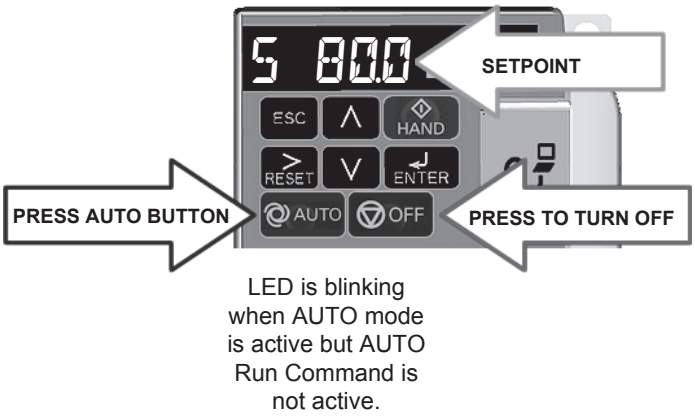

Figure 4: Digital Operator

Press the **AUTO** button to place the iQpump Micro into AUTO mode.

The AUTO mode will start and stop based on the Run Source Selection setting parameter b1-02 (Refer to Step 3).
The Reference Source Selection parameter b1-01 setting configures the AUTO mode reference source.

2.4 Hand Mode

Hand Mode runs the pump continuously until OFF is pressed. In Hand mode the pump will never sleep. This mode should only be used when troubleshooting the pump.

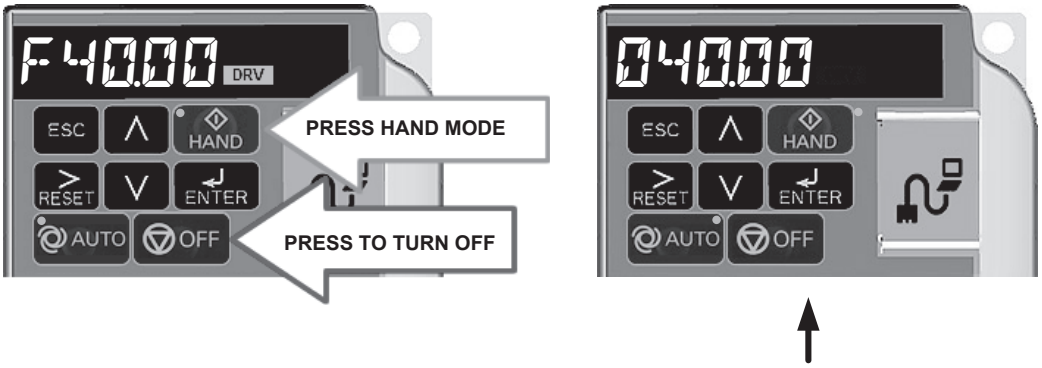

Press ENTER to access HAND Speed. Use ∧ ∨ RESET to change HAND Speed value.

Press ENTER to save value.

2.5 How to Change Parameters

IQpump Micro digital operator power-up state

Press V two times until the digital operator shows the parameter menu (PAR) then press ENTER.

Select Parameter Menu

Press RESET to select the digit you would like to change. Next use ∧ and V to select the parameter group, sub-group or number.

Select Parameter

Modify the parameter value using ∧ and V press ENTER to save the new value.

2.6 Monitor Motor Frequency and Current

IQpump Micro digital operator power-up state

Press ∧ until the **FOUT** LED turns on. The display now shows the actual drive output frequency in Hz.

Output Frequency

Pressing ∧ again will show the motor output current. The 'A' behind the value means 'Amps'.

Motor Current

2.7 Parameter Overview-Quick Setting Menu

Task	Parameter	Name	Description / Menu Access	Default Value
2.71 Read-only parameter. It cannot be modified. Factory set to (0: Pressure control)	A1-06	Application Preset	Displays selected applications.. Quick Setting	Factory set to (0: Pressure control). Dependent on Initialization Mode
2.72 Set to the motor nameplate full load amps Set service factor amps (SFA). for submersible motors use	E2-02	Motor Rated Current	Motor nameplate full load amps. Quick Setting	Drive Size Dependent
2.73 Enter '4' for an 1800 RPM motor and '2' for a 3600 RPM motor. Confirm number of poles: - 2 Pole Motor = 3600 RPM - 4 Pole Motor = 1800 RPM - 6 Pole Motor = 1200 RPM - 8 Pole Motor = 900 RPM	E2-04	Number of Motor Poles	Sets of number of motor poles. Number of motor poles is used to show the correct motor RPM on the display Quick Setting	2
2.74 System Scaling: Enter feedback device maximum: Example: Enter 200 for pressure transducer with a maximum of 200 PSI at 20mA. Confirm feedback device scaling (See Illustration 1)	P1-03	Feedback Device Scaling	Sets the scaling of feedback device in user-set units Quick Setting	145.0
2.75 Set to system pressure	Q1-01	PID Controller Setpoint 1	Sets the PID Setpoint when b1-01 is set to 0. Quick Setting	0.0
2.76 Choose one of two types of Start Level programming 1. Program the Start Level as an Absolute OR 2. Program the Start Level as a Delta Level from the System Setpoint	P1-04	Start / Drawn Down Level	The system starts when the feedback level drops below the start level for the time set in P1-05 (default 1 sec). This level also specifies the wakeup level when the drive is in Sleep Mode. When this parameter is set to a negative value, the feedback level must drop that amount below the setpoint. Setting this parameter to 0.0 disables the function. When P1-01, Pump Mode, is set to 3 (MEMOBUS network), this function is active only on the first drive in the network. Quick Setting	0.0 PSI

Task	Parameter	Name	Description / Menu Access	Default Value
2.77 Program the Start Level as an Absolute Value. Start / Draw Down Level must be programmed to a positive value for the Start / Draw Down Level to be an Absolute Value. Example: Start / Draw Down Level P1-04 set to 50 PSI and delay time P1-05 set to 5 sec. Result: Pump System will start when the pressure drops below 50 PSI for 5 sec. **OR** Program the Start Level as a Delta Level from the System Setpoint. Start / Draw Down Level must be programmed to a negative value for the Start Level to be a delta value from the setpoint. Example: Start / Draw Down Level P1-04 set to - 10 PSI with a system setpoint of 50 PSI and delay time P1-05 set to 5 sec. Result: Pump System will start when the pressure drops below 40 PSI (50 - 10) for 5 sec.		**Important! It is mandatory to program the Start / Draw Down Level in order to use the sleep function.** **LED Digital Operator (Standard)** 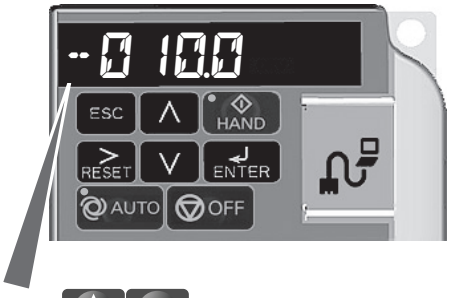 **Use** ∧ ∨ **to change the sign**		
2.78 Set Minimum Pump Frequency to the value at which the pump enters a no-flow condition	P1-06	Minimum Pump Speed	Minimum speed (Hz) for pump motor operation Quick Setting	40.0 Hz
2.79 Recommended for use when the Start / Stop command is from the digital operator **WARNING!** Sudden Movement Hazard. If the drive is powered down while running, it will automatically initiate an internal Run command upon power-up	P4-10	AUTO Mode Operator Run Power Down Storage	Stores the run status in the AUTO mode when operating from the digital operator (b1-02=0) 0: Disabled 1: Enabled	0: Disabled
Optional step: HAND key on digital operator.	P5-04	HAND Key Function Selection	Enables or disables the HAND key on the digital operator. 0: Disabled 1: Enabled	1: Enabled

2.8 Start / Draw Down Level

The start/draw down level is the value at which the system will start the pumps to build pressure. This allows the system to sleep longer and prevent excessive cycling. If (P1-04) is positive, the system will start when the discharge pressure falls below this absolute value (P1-04) and after a delay (P1-05) has elapsed. If this value is a negative number (-P1-04), the discharge pressure must fall that amount below the setpoint before starting the system. P1-04 is set to negative (-) 10 by default.

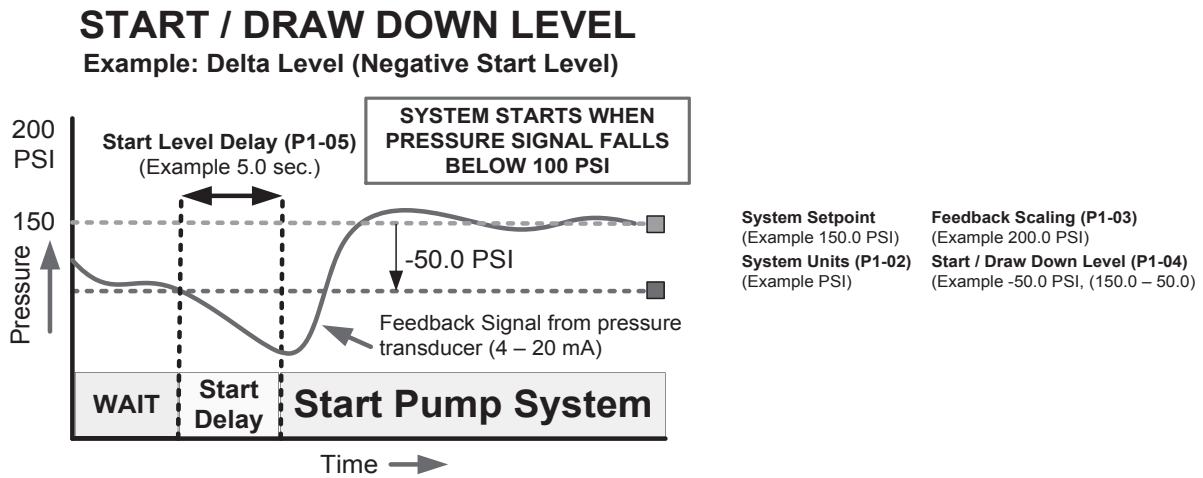

By default, the system will start when the discharge pressure drops 10 psi (P1-04) below the setpoint after delaying 1 second (P1-05). If the Start/Draw Down Level is modified from factory defaults, the pressure tank air precharge must be set 5 psi below the start pressure. For example, a system with a 60 psi setpoint (Q1-01) and a -15 psi draw down level (P1-04), the tank precharge air pressure must be set at 40 psi. Ensure water pressure is zero when adjusting and measuring the precharge air pressure.

2.9 Automatic Restart

In the event of a power supply loss or failure, the system is automatically programmed to restart once power has been restored. To disable this function, set (P4-10) to a value of 0:Disabled.

2.10 High/Low Discharge Pressure

When the discharge feedback signal rises above the high feedback detection level (P1-11) for a specified time (P1-12), the system will respond based on the actions in (P1-13). By default, the drive will fault (P1-13) if the pressure rises above 150 psi (P1-11) for longer than 5 seconds (P1-12). The drive will attempt to restart (L5-41) if the pressure falls below the high feedback level

When the discharge feedback signal falls below the low feedback detection level (P1-08) for a specified time (P1-09), the system will respond based on the actions in (P1-10). By default, the drive will fault (P1-10) if the pressure falls below (P1-08) for longer than 10 seconds (P1-09). The drive will attempt to restart (L5-40) if the pressure rises above the low feedback level. To disable the low outlet pressure, set (P1-10) to 1:Alarm.

3. Troubleshooting

General Troubleshooting

Problem	How To Check	Solution
iQpump is on AUTO, green LED is blinking, pump is not running.	iQpump is sleeping	System demand is low. Once the outlet pressure has fallen below the start/draw down level, the iQpump will start the pump.
Water is leaking from around motor/pump coupling	Turn system off. Remove motor coupling guards. Observe mechanical seal for leaks.	Replace mechanical seal. See Pump manual 3210-528.
Alarm light is blinking and Digital Operator Display indicates Alarm.	Review code and error displayed on screen. Take appropriate actions to fix the alarm problem.	If problem still persists, call factory for alarm troubleshooting.
Alarm light is lit and Digital Operator Display indicates Fault.	Review code and error displayed on screen. Take appropriate actions to fix the faults.	Turn power off to the system using the disconnect. Wait 20 seconds and turn power back on. Press the RESET key, and then press AUTO to restart the system. If the fault re-occurs, call factory for fault troubleshooting.

Problem: Pump is running but does not deliver water

Problem	How To Check	Solution
Bypass line/valve open	Locate bypass valve (if applicable). Ensure valve is completely in the closed position	Close valve entirely.
Pump Isolation Valves are closed	Locate pump isolation valves located on the inlet and outlet of each pump. Both valve handles should in the open position	Open valves entirely (parallel with pump).
Pump may be air locked	Locate the purge port located on top of the pump. Loosen the smaller hex bolt slightly. Listen for air escaping.	Keep purge port open until all air has been evacuated and a steady stream of water is flowing. Close purge port.
Pump may have lost Prime	Check suction pipes, check valves, and foot valves for leaks	Ensure suction piping is pressure tight. Replace check valves or foot valves as necessary. Re-prime as needed using the pump fill port.
Shaft Coupling loose	Turn system off and switch disconnect to “OFF” position. Remove shaft cover and inspect motor coupling.	If loose, refer to maintenance section of Manual 3210-528 for correct shaft coupling reassembly.
Motor operating in wrong direction	View motor direction from top. Motor should turn in direction of arrow on pump.	If backwards, switch any two motor leads at the drive. Ensure drive is off, power is removed, and charge indicator has been extinguished before removing terminal cover.

Problem: Pump continues to run and won’t sleep

Problem	How To Check	Solution
Pressure tank too large	The tank should be 10-20% of the maximum flow of the system. For example, a system with a maximum flow of 50 GPM should use a 5 - 10 gallon tank. The tank air pressure should be 15 PSI below the set point.	If the tank is larger than 25% of the maximum flow, the pump may not sleep when water is not running. Decreasing Parameter P2-24 can improve this. See Section 2.5 for changing parameters.

4. Wiring Diagrams

The attached wiring diagrams show the electrical connections for various DuraMAC™ Variable Speed Booster Systems. Select the proper wiring diagram for the model you are installing. These wiring diagrams show factory installed wiring and are used for reference only. Use appropriate supply wire size for the rated current, voltage, and length of wire. Always use good wiring practices and follow all local and state wiring codes. Ensure all equipment is grounded properly.

The iQpump Micro drive contains lethal voltages. Before removing the drive terminal cover, make certain that the disconnect power has been turned off AND the charge indicator light has turned off. The charge indicator may take several minutes to extinguish as the DC bus voltage is discharging.

Transducer 4-20mA and Duplex Communication Circuit

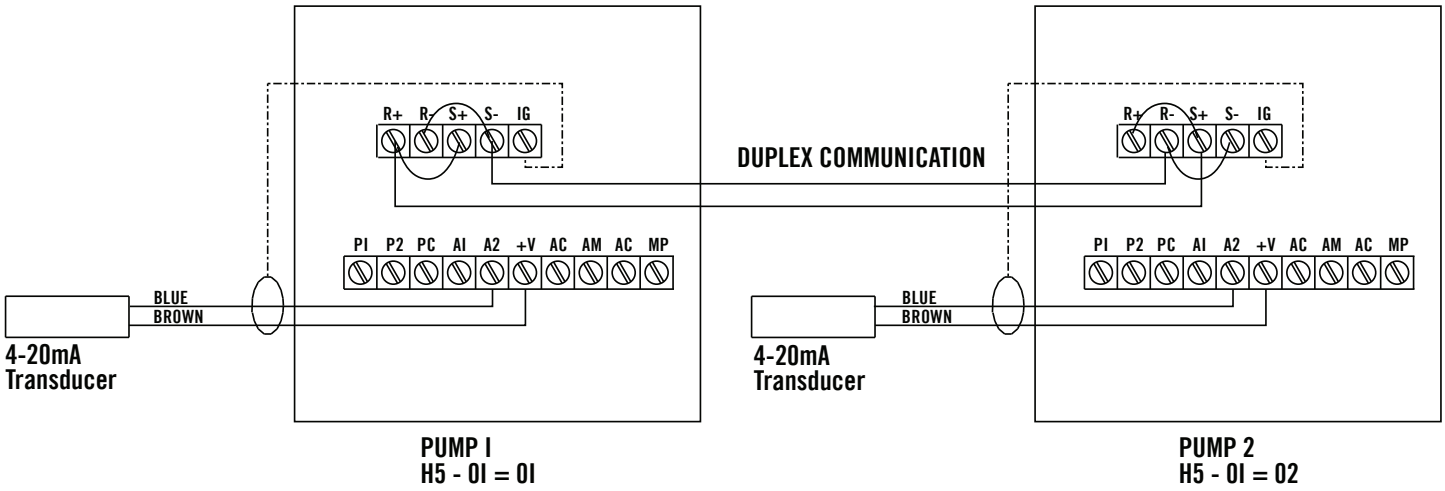

I (right position)	Current input (default setting) 4 to 20 mA or 0 to 20 mA)

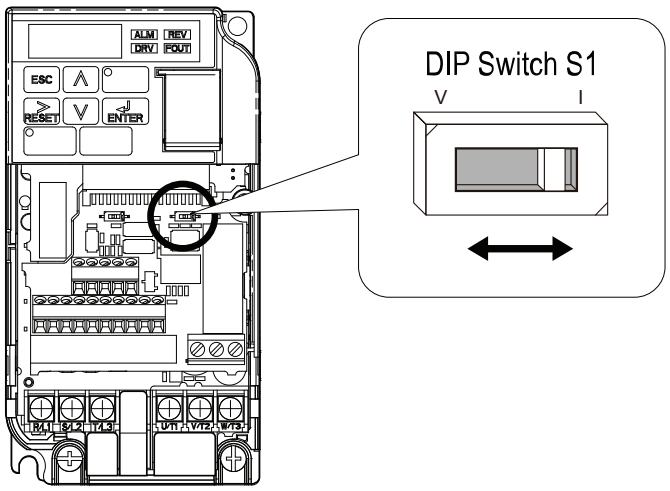

Note: Each iQpump Micro drive must have its own unique serial address (H5-01)

Use shielded communication cables to connect all iQpump Micro drives.

Connect all iQpump Micro drives according to the wiring shown above. (R+ to S+ and R- to S-)

Motor, Line Power Circuit

4.1 Remove the front cover

NOTICE: Improper removal of the drive's protective covers and conduit bracket (NEMA 1, UL Type 1) can cause damage to the drive. Adhere to iQpump User Manual, Section 3. Protective Covers to avoid drive damage.

NEMA 1, UL Type 1 Enclosure

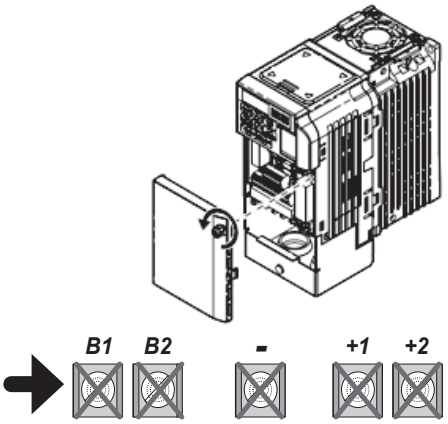

4.2 Connect main input power and motor wiring to the drive

Refer to Figure 1 for single-phase input power drive models.
Refer to Figure 2 for three-phase input power drive models.
Follow accepted wiring practices and applicable electric codes. Ensure all equipment is properly grounded.

WARNING! Fire Hazards. Do not connect terminals B1, B2(-), +1, +2 terminals to earth ground. Only connect ground wiring to designated ground terminals.

Figure 1: Line and Motor Electrical Connections - Single-Phase Input Power

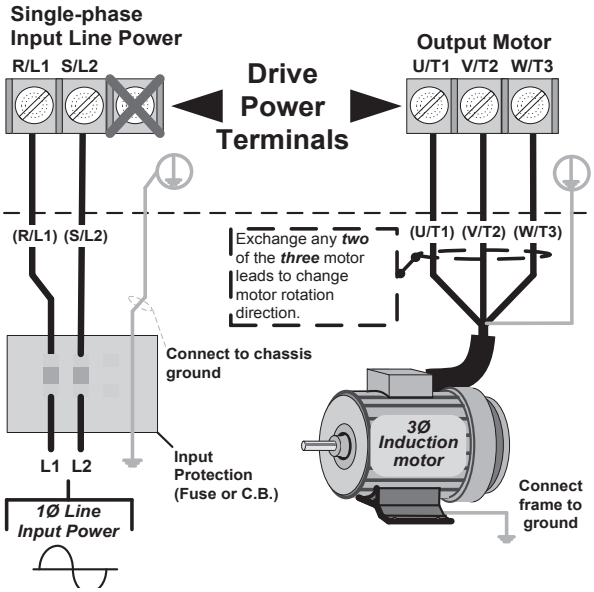

Sizing note: Verify the drive is properly sized for single phase input power. The drive input line voltage must be equal to or greater than motor rated voltage for best performance.

Figure 1: Line and Motor Electrical Connections - Three-Phase Input Power

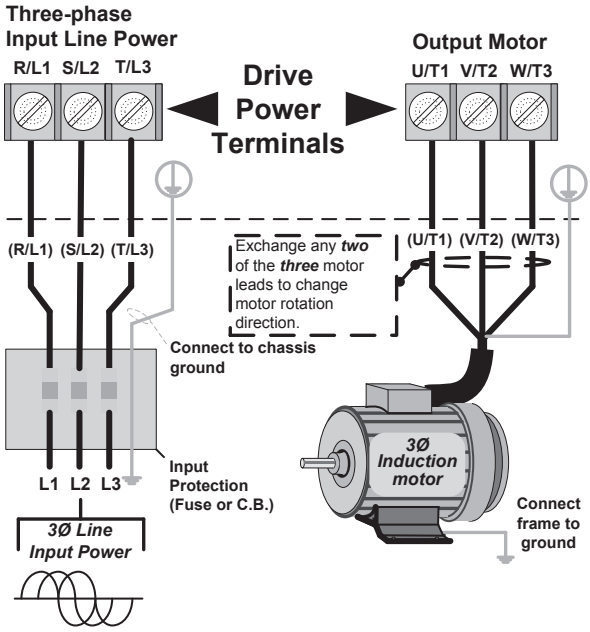

230 VOLT WIRE GAUGE AND FUSE RATING (Amps)

Drive	HP	Phase	Supply IN	Motor Out	Fuse Rating J, T, CC	Breakers MCCB
PWBV0006	1.5	1	12 AWG	14 AWG	20	30
PWBV0010	2	1	10 AWG	14 AWG	35	50
PWBV0012	3	1	10 AWG	14 AWG	40	60
PW2V0006	1.5	3	14 AWG	14 AWG	10	15
PW2V0010	2	3	12 AWG	14 AWG	15	25
PW2V0012	3	3	12 AWG	14 AWG	20	30

Main Circuit Terminal Wiring

Yaskawa recommends using closed-loop crimp terminals on all drive models. UL/cUL approval requires the use of UL Listed closed-loop crimp terminals when wiring the drive main circuit terminals. Use only the tools recommended by the terminal manufacturer for crimping. The wire gauges listed in Table 4.21 & 4.22 are Yaskawa recommendations. Refer to local codes for proper wire gauge selections.

Single-Phase 200 V Class

Table 4.21 - Wire Gauge and Torque Specifications

Drive Model	Terminal	Recommended Gauge AWG, kcmil	Wire Range AWG, kcmil	Screw Size	Tightening Torque N•m (lb.in.)
BV0006	R/L1, S/L2, T/L3	12	14 to 10	M4	1.2 to 1.5 (10.6 to 13.3)
	U/T1, V/T2, W/T3	14	14 to 10		
	⊖,⊕1,⊕2	---	14 to 10		
	B1, B2	---	14 to 10		
	⏚	10	14 to 10		
BV0010	R/L1, S/L2, T/L3	10	14 to 10	M4	1.2 to 1.5 (10.6 to 13.3)
	U/T1, V/T2, W/T3	14	14 to 10		
	⊖,⊕1,⊕2	---	14 to 10		
	B1, B2	---	14 to 10		
	⏚	10	14 to 10		
BV0012	R/L1, S/L2, T/L3	10	14 to 10	M4	2.3 to 2.5 (20.4 to 22.1)
	U/T1, V/T2, W/T3	14	14 to 10		
	⊖,⊕1,⊕2	---	14 to 10		
	B1, B2	---	14 to 10		
	⏚	10	14 to 10		

Three-Phase 200 V Class

Table 4.22 - Wire Gauge and Torque Specifications

Drive Model	Terminal	Recommended Gauge AWG, kcmil	Wire Range AWG, kcmil	Screw Size	Tightening Torque N•m (lb.in.)
2V0006	R/L1, S/L2, T/L3	14	18 to 14	M4	0.8 to 1.0 (7.1 to 8.9)
	U/T1, V/T2, W/T3	14	18 to 14		
	⊖,⊕1,⊕2	---	18 to 14		
	B1, B2	---	18 to 14		
	⏚	14	18 to 14		
2V0010	R/L1, S/L2, T/L3	12	14 to 10	M4	1.2 to 1.5 (10.6 to 13.3)
	U/T1, V/T2, W/T3	14	14 to 10		
	⊖,⊕1,⊕2	---	14 to 10		
	B1, B2	---	14 to 10		
	⏚	10	14 to 10		
2V0012	R/L1, S/L2, T/L3	12	14 to 10	M4	1.2 to 1.5 (10.6 to 13.3)
	U/T1, V/T2, W/T3	14	14 to 10		
	⏚, ⊖, ⊕1, ⊕2	---	14 to 10		
	B1, B2	---	14 to 10		
		10	14 to 10		

Factory Recommended Branch Circuit Protection

Yaskawa recommends installing one of the following types of branch circuit protection to maintain compliance with UL508C. Semiconductor protective type fuses are preferred.

Branch circuit protection shall be provided by any of the following according to Table 4.23.
- Non-time Delay Class J, T, or CC fuses.
- Time Delay Class J, T, CC, or RK5 fuses.
- Semiconductor fuses.
- Molded Case Circuit Breakers (MCCB).

Table 4.23 - Branch Circuit Protection

Drive Model	Non-time Delay Fuse Rating (A) <f>	Time Delay Fuses		Bussmann Semiconductor Fuse Part Number (Fuse Ampere) <4>	MCCB <5>	
		Class J, T, or CC Fuse Rating (A) <2>	Class RK5 Fuse Rating (A) <3>		Rating (A)	Minimum Enclosure Volume (in^3)
200 V Class Single-Phase Drives						
BV0006	40	20	30	FWH-80B (80)	30	1152
BV0010	40	35	45	FWH-100B (100)	50	1152
BV0012	50	40	50	FWH-125B (125)	60	1152
200 V Class Three-Phase Drives						
2V0006	20	10	15	FWH-25A14F (25)	15	1152
2V0010	25	15	20	FWH-70B (70)	25	1152
2V0012	25	20	30	FWH-70B (70)	30	1152

<1> Maximum 300% of drive input current rating for any Class J, T, or CC fuse except for models 4V0004, 4V0005, and 4V0007.

<2> Maximum 175% of drive input current rating for any Class J, T, or CC fuse.

<3> Maximum 225% of drive input current rating for any Class RK5 fuse.

<4> When using semiconductor fuses, Bussmann FWH are required for UL compliance.

<5> Maximum MCCB Rating is 15 A or 200% of drive input current rating, whichever is larger. MCCB voltage rating must be 600 Vac or greater. Additionally, when using MCCBs for protection, the drive must be installed in a ventilated enclosure with minimum volume according the “Minimum Enclosure Volume” column.

A.Y. McDonald Mfg. Co. is a leading manufacturer of Water Works, Plumbing, Pumps, and Natural Gas Products. The Company has distinguished itself with a proud tradition of quality and reliability since its founding in 1856.

The mission of A.Y. McDonald Mfg. Co., in the words of our founder, is "to make good products and sell them honestly." We, the stockholders and employees, accomplish this by extending the McDonald family culture through excellent customer service and by focusing on our customers' needs.

At A.Y. McDonald, you aren't just getting a product; you are getting an innovative solution, access to educational opportunities, and the ability to be treated like family. The customer is the boss and we aim to break the mold on how we reach customer satisfaction. Because in the end, without you, there would be no us.

THE CUSTOMER IS THE BOSS

EST. 1856

McDonald®

WITHOUT YOU THERE IS NO US.

4800 Chavenelle Road | Dubuque, IA 52002

1-800-AY-CARES | aymcdonald.com | aymcdonaldu.com
(292-2737)

Follow us on social media